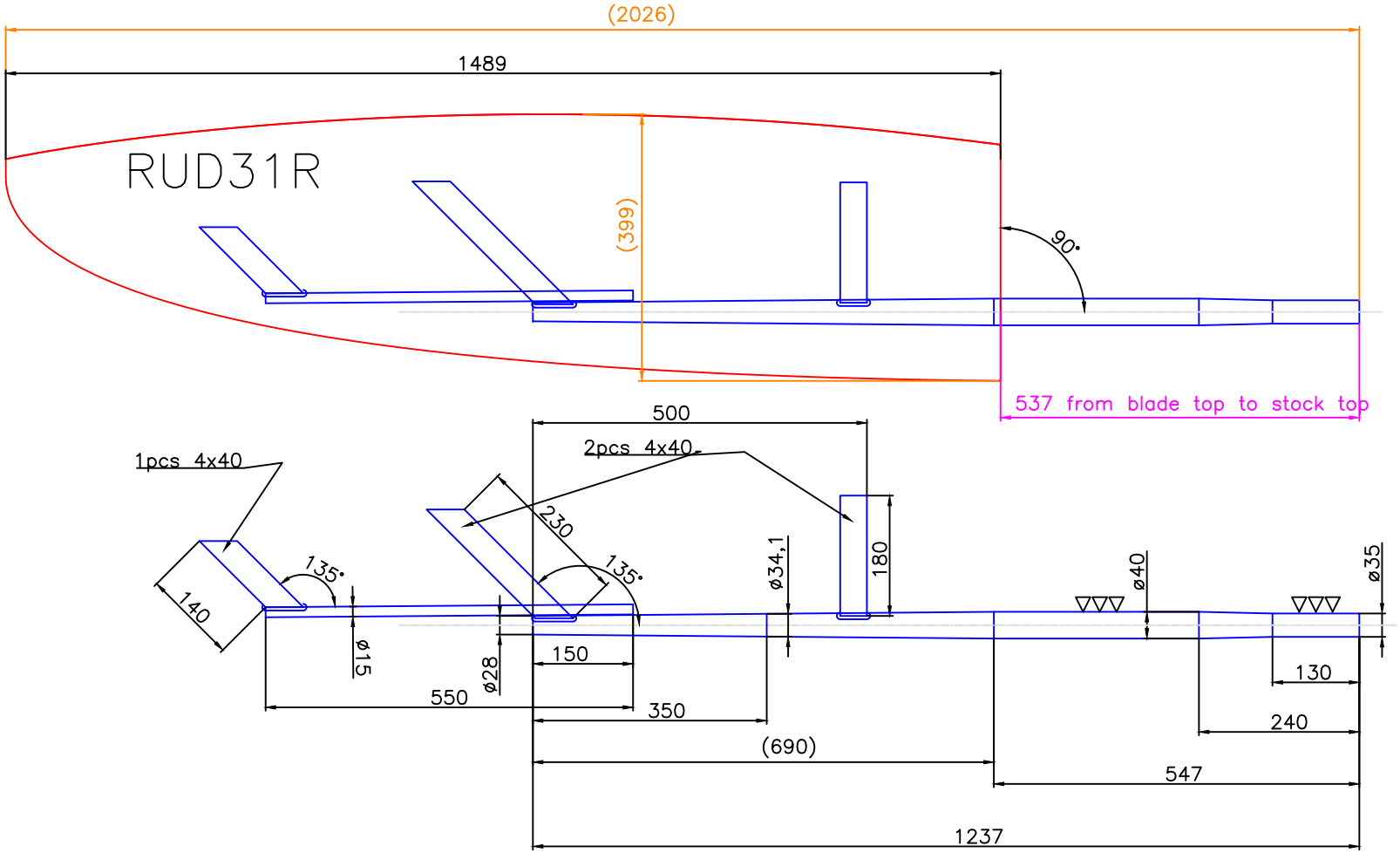

RUD31R

Project Hiddensee	Product Name: Rudder	Filename Hiddensee Rudder	
Jefa Rudder SYSTEMS JEFA MARINE A/S NIMBUSVEJ 2 2670 GREVE. DENMARK Tlf: +45 4615 5210 Email: info@jefa.dk www.jefa.dk	Drawing no. –	Sheet: 1 of 1	Proj. method:
	Material: Aisi 630	Scale: 1:10 / Format: A4	CAD-System: SolidWorks
	Creation Date: 05-02-2024	Dimensions are given in mm. Dimensions without tolerances according to DS/ISO 2768-m.	
	Author: TCH	This drawing belongs to Jefa Marine A/S and may not be used or shown without permission.	