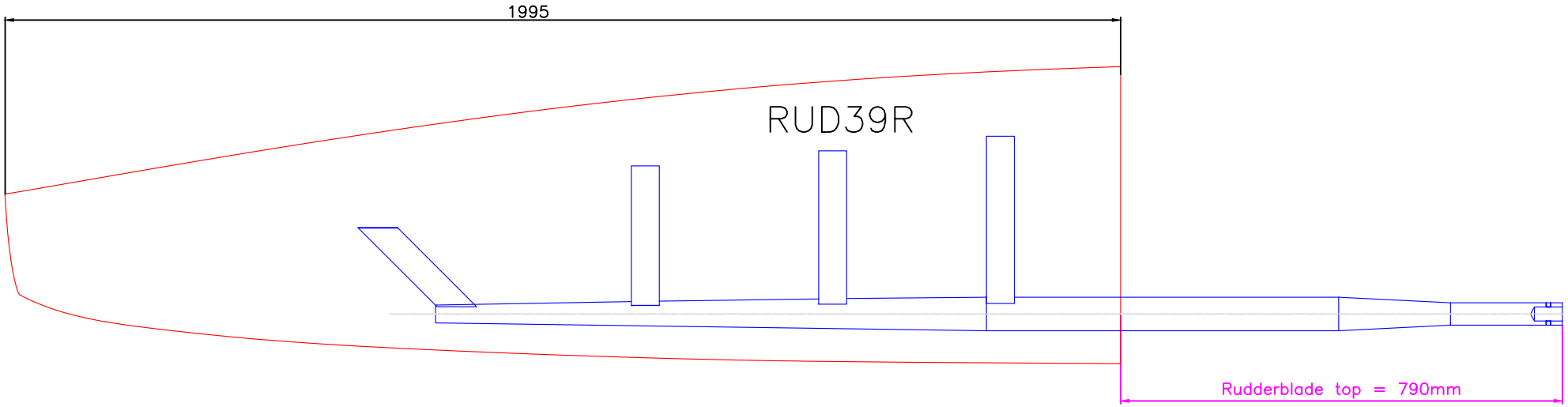

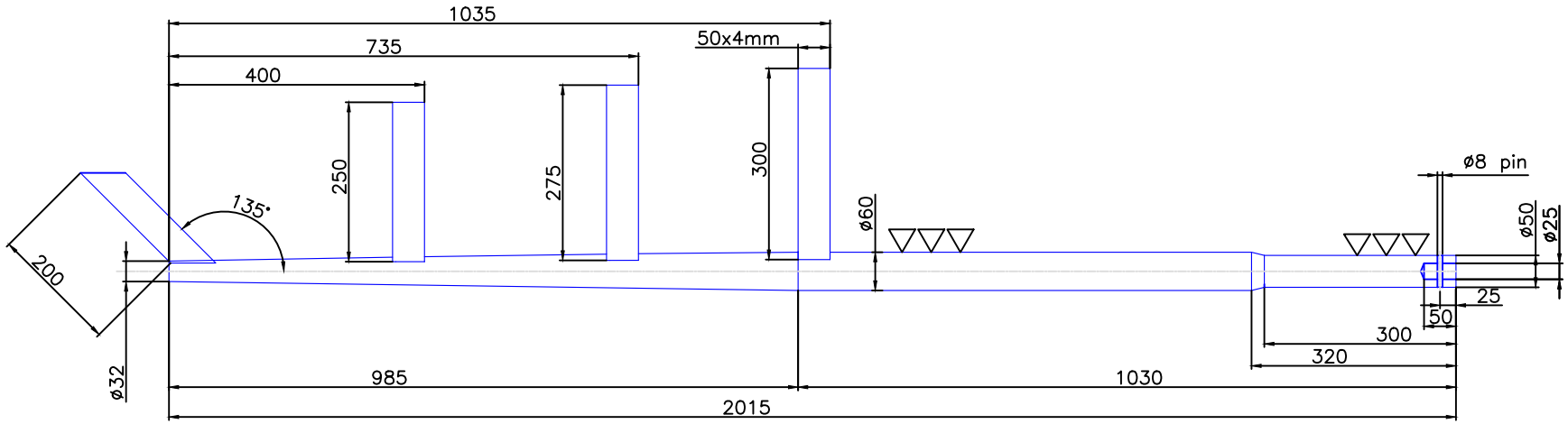

REVISIONS			
Rev.	Description	Date	Author

RUD39R

Project: Grand Soleil 42

Product Name: Replacement rudder

Filename: Grand Soleil 42 replacement

Drawing no.: RUD39R

Sheet: 1 of 1

Proj. method:

Material: Aisi630

Scale: 1:11

Format: A4

CAD-System: SolidWorks

Creation Date: 21-06-2018

Dimensions are given in mm. Dimensions without tolerances according to DS/ISO 2768-m.

Author: TCH

This drawing belongs to Jefa Marine A/S and may not be used or shown without permission.

Jefa Rudder SYSTEMS
JEFA MARINE A/S
NIMBUSVEJ 2
2670 GREVE. DENMARK
Tlf: +45 4615 5210
Email: info@jefa.com www.jefa.com