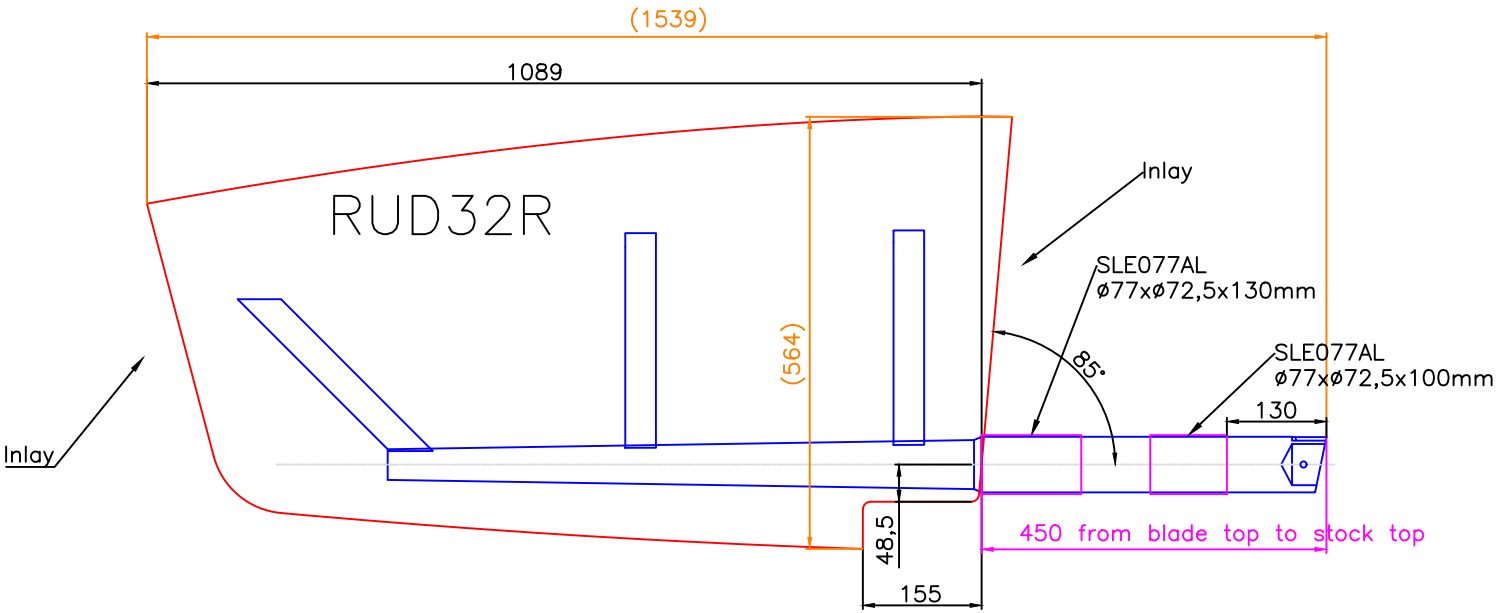

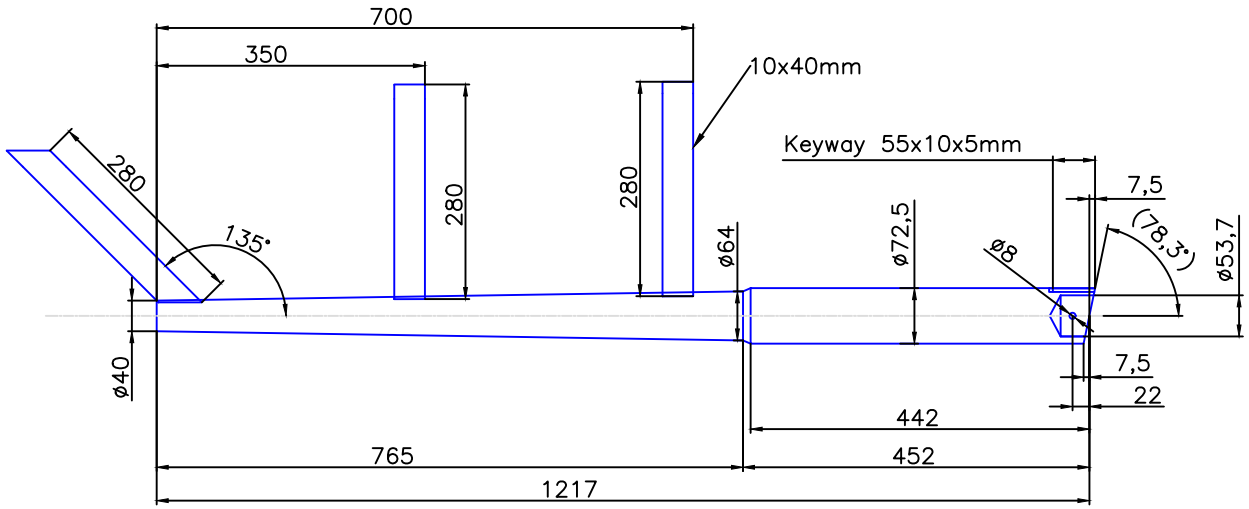

RUD32R

REVISIONS			
Rev.	Description	Date	Author

Project: Farr 1020

Jefa Rudder SYSTEMS

JEFA MARINE A/S
NIMBUSVEJ 2
2670 GREVE. DENMARK
Tlf: +45 4615 5210
Email: info@jefa.com www.jefa.com

Product Name: Replacement rudder		Filename: Farr1020 replacement rudder	
Drawing no.: RUD32R		Sheet: 1 of 1	Proj. method:
Material: Alu6082		Scale: 1:10	Format: A4	CAD-System: SolidWorks
Creation Date: 29-05-2019	Dimensions are given in mm. Dimensions without tolerances according to DS/ISO 2768-m.		
Author: TCH	This drawing belongs to Jefa Marine A/S and may not be used or shown without permission.		