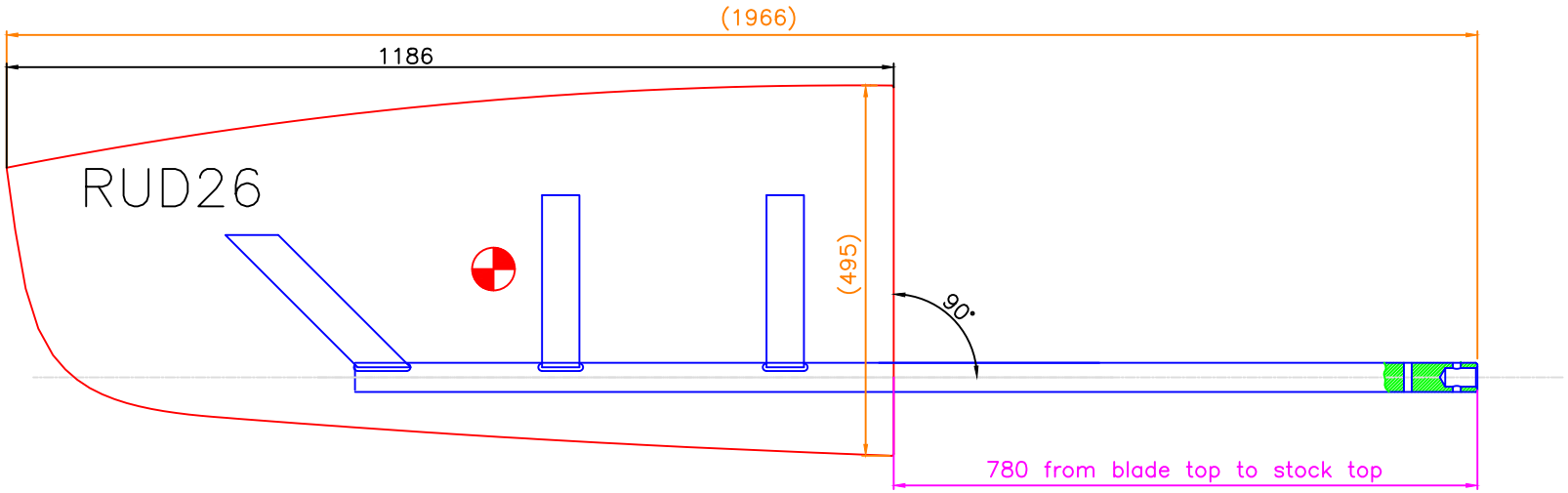

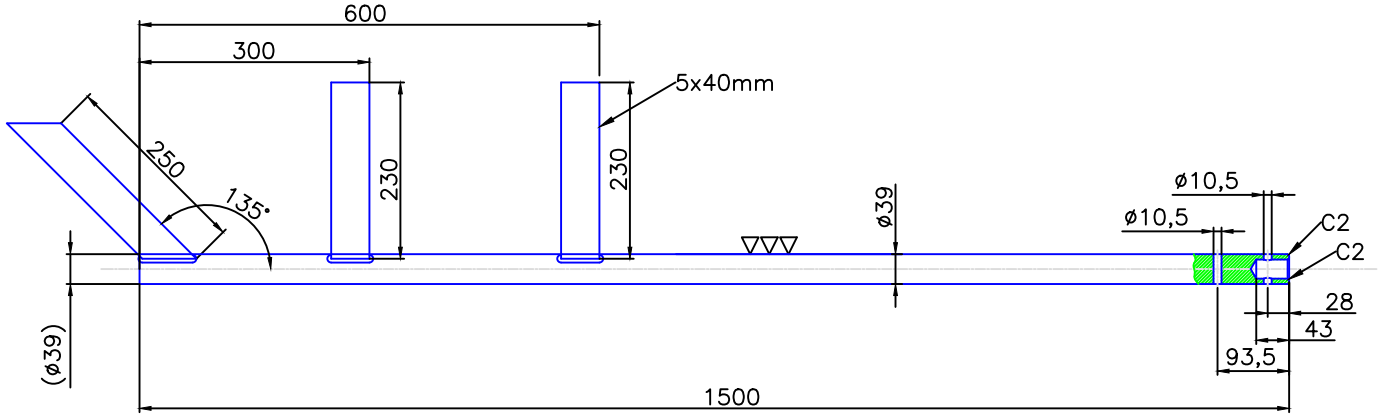

RUD26

REVISIONS			
Rev.	Descroption	Date	Author

Project: Dufour Gib Sea 33

Jefa Rudder SYSTEMS

JEFA MARINE A/S
NIMBUSVEJ 2
2670 GREVE. DENMARK
Tlf: +45 4615 5210
Email: info@jefa.dk www.jefa.dk

Product Name: Replacement rudder		Filename: Dufour Gib Sea 33 replacement rudder	
Drawing no.: –		Sheet: 1 of 1	Proj. method:
Material: Aisi630	Scale: 1:10	Format: A4	CAD-System: SolidWorks
Creation Date: 31-08-2021	Dimensions are given in mm. Dimensions without tolerances according to DS/ISO 2768-m.		
Author: TCH	This drawing belongs to Jefa Marine A/S and may not be used or shown without permission.		