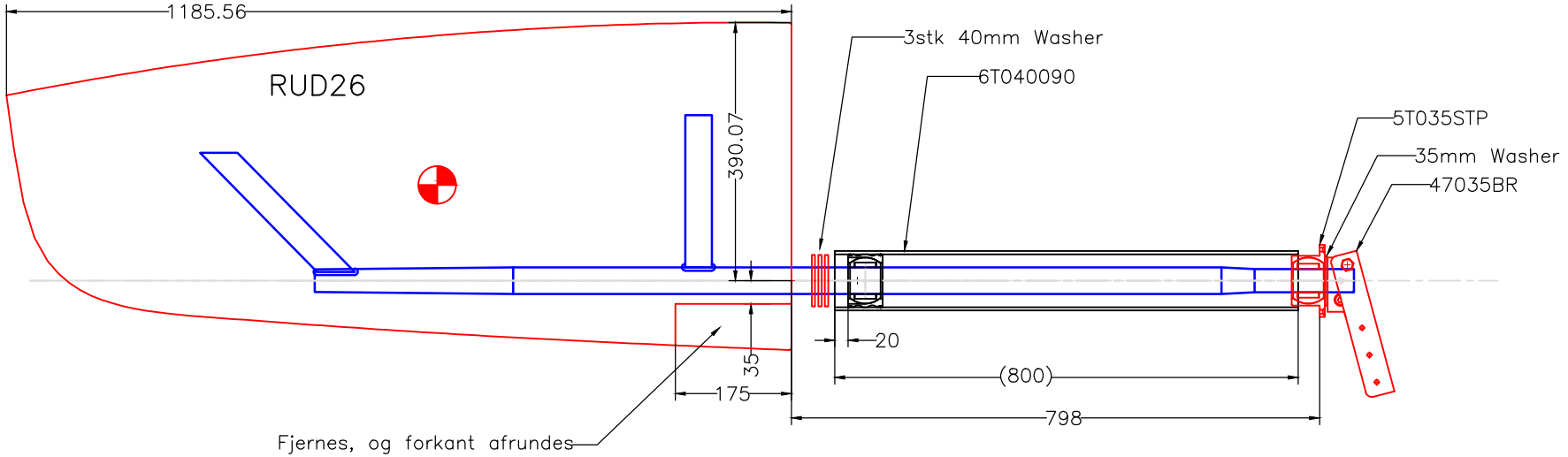

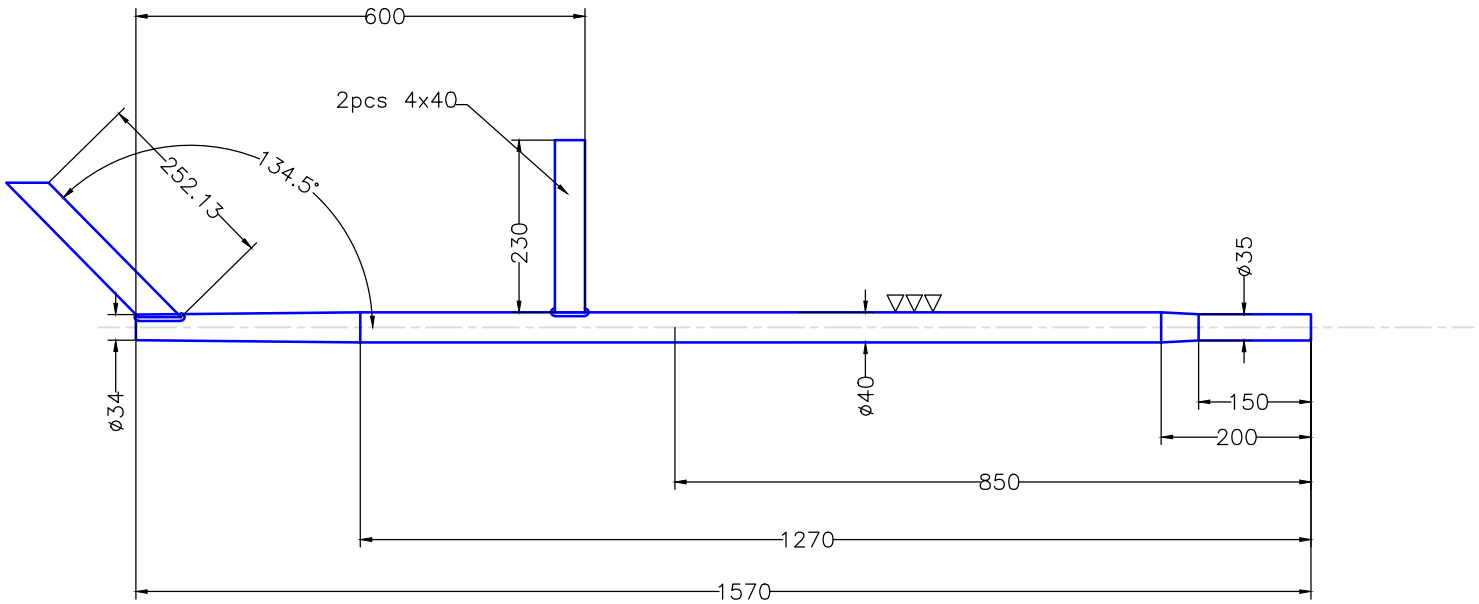

Modify date –	Project:	Banner 30 with RUD26 Per Thorsen	
Modify date			
Modify date	Scale	1:10	Date 2012-06-15
Modify date	Material	aisi630	Drawing no. —
Modify date	Filename (dwg)	Banner 30	
Modify date	Drawn by	JF	

Jefa Rudder SYSTEMS
JEFA MARINE A/S
NIMBUSVEJ 2
2670 GREVE, DENMARK
Tlf.+45-4615 5210 & Fax +45-4615 5208
E-mail info@jefa.com & WWW.jefa.com