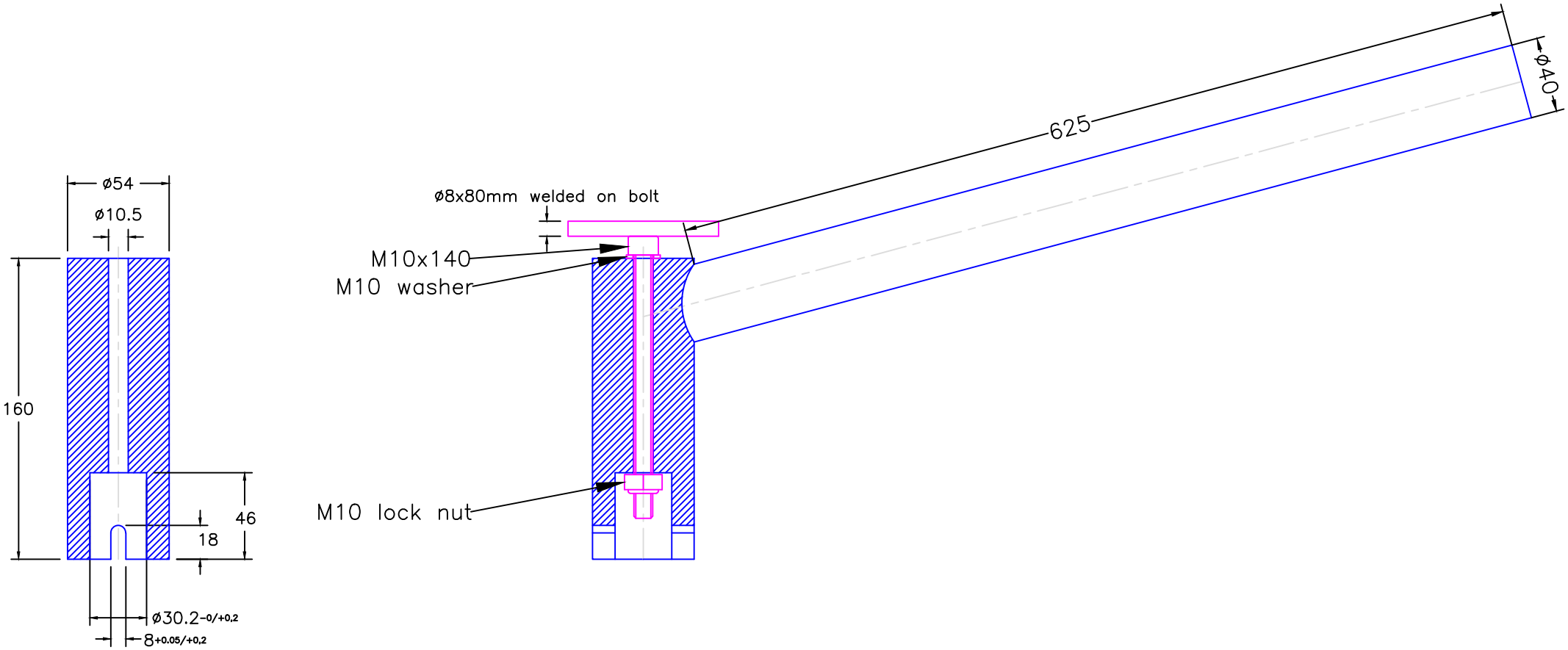

Modify date	Project:	Alerion 30 Emergency tiller	
Modify date			
Modify date	Scale	—	Date 12/08-2015
Modify date	Material	Alu6082	Drawing no. ALE30-EM
Modify date	Filename (dwg)	Alerion 30 EM-tiller	
Modify date	Drawn by	KJ	—

Jefa Rudder SYSTEMS
JEFA MARINE A/S
NIMBUSVEJ 2
2670 GREVE, DENMARK
Tlf.+45-4615 5210 & Fax +45-4615 5208
E-mail info@jefa.com & WWW.jefa.com